ADC Lab Logbook

Part 4 | Section 2: Amplifier Stages

Section 2: Amplifier Stages

CE Amplifier with Active Load

Circuit and Bias Design

A common emitter amplifier was designed using a 2N2222 NPN transistor with a split supply (±5 V). R_B = 1900 kΩ and R_C = 5 kΩ were selected to give a quiescent collector current IC = 1 mA. The LTspice operating point simulation confirmed I_C(Q1) = 1.00220 mA.

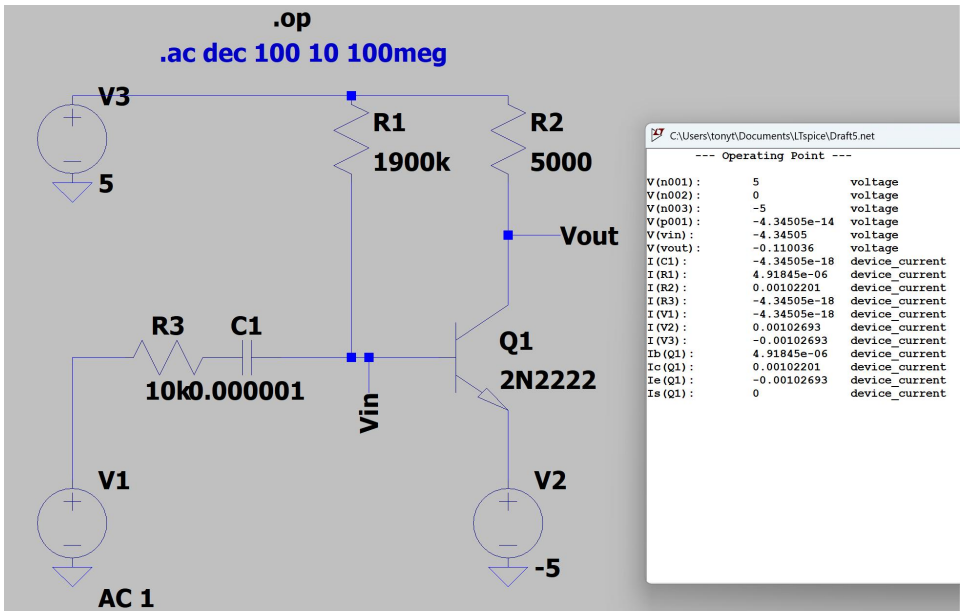

Theoretical Gain

Using the small-signal equivalent circuit:

$$R_B = 1900\ k\Omega, \quad R_C = 5\ k\Omega, \quad I_C = 1.002\ mA, \quad V_T = 0.025\ V$$

$$r_o = V_A / I_C = 100 / (1.002 \times 10^{-3}) \approx 97846\ \Omega$$

$$g \quad = I_C / V_T = 0.04\ S$$

$$A_V = -g \quad \cdot (R_C \parallel r_o) = -0.04 \cdot (5k \parallel 97.8k) \approx -190.3$$

$$Gain = 20 \cdot \log_{10}(190.3) \approx 45.6\ dB$$

The AC analysis simulation confirmed a midband gain of **45 dB**, in close agreement with theory.

Input Resistance

Small-signal model analysis:

$$r_{be} = \beta / g \quad = 200/0.04 = 5\ k\Omega$$

$$r_{in} = R_B \parallel r_{be} = (1900k \times 5k) / (1900k + 5k) \approx 4986.9\ \Omega$$

Simulation method: a 10 kΩ resistor was added in series with the coupling capacitor. Using the gain change:

$$A_V' = A_V \cdot r_{in} / (r_{in} + 10k)$$

$$r_{in} = 10k \cdot A_V'/(A_V - A_V') = 10k \cdot 10^{(36.15/20)} / (10^{(45.6/20)} - 10^{(36.15/20)}) \approx 5090.6\ \Omega$$

The simulated result of ~5.1 kΩ closely matches the theoretical prediction of ~5 kΩ.

CE Amplifier with Active Load (Current Mirror)

Circuit Modification

The collector resistor R^c was replaced by a 2N2907 PNP current mirror (T_3 –T_4), which acts as an active load. This greatly increases the effective load impedance seen by the output, thereby increasing the voltage gain. The bias components were adjusted: R_B = 9.34 kΩ, R_2 = 148 kΩ, R_1 = 67 kΩ.

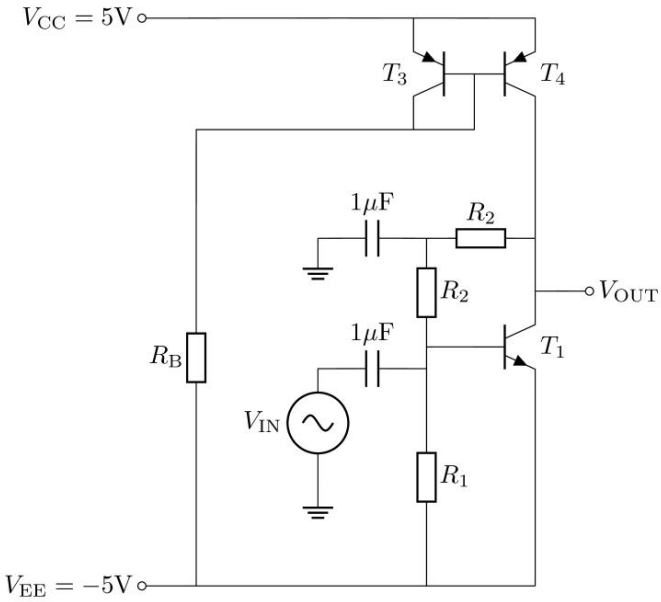

Theoretical Gain with Active Load

With the active load, the effective output resistance is the parallel combination of r_o of T_1 (NPN) and r_o of T_4 (PNP mirror):

$$A_V = -g \cdot (1/r_{o,T_1} + 1/r_{o,T_4} + 1/R_2)^{-1}$$

$$= -0.04 \cdot (I_C/V_a + I_{C,T_4}/(2 \cdot V_A) + 1/148k)^{-1}$$

$$= -0.04 \cdot (1m/100 + 2m/(2 \cdot 100) + 1/148k)^{-1}$$

$$\approx -1497.7 \implies 63.51\ dB$$

The measured midband gain from the AC simulation was **63.9 dB**, in excellent agreement with the theoretical value of 63.51 dB.

Darlington Pair

Circuit Description

A Darlington pair was constructed by cascading two transistors T_2 and T_1 , with T_2 's emitter driving T_1 's base and a resistor R^M from T_1 's emitter to ground. The effective current gain of the pair is β_1 β_2 , making the combined base current negligible. Including R_E, the input resistance is:

$$r_{in} = \beta(1/R_E + g/\beta)^{-1}$$

Improvements from the Darlington Pair

Improvements:

- **Very high effective current gain ($\beta_1 \beta_2$):** Base current drawn from the bias network becomes negligible.
- **Reduced loading on bias network ($R_1 - R_2$):** More accurate and stable DC operating point.
- **Improved current mirror accuracy:** Smaller base-current error improves active load matching.
- **Higher small-signal output resistance:** Typically increases overall voltage gain.
- **Higher input resistance:** Less loading on the preceding stage.

Trade-offs:

- **Higher turn-on voltage:** Requires $\approx 2V_{BE} \approx 1.4$ V, reducing available output voltage swing.
- **Increased parasitic capacitance:** Slight reduction in high-frequency bandwidth.

Overall, the Darlington pair increases gain and bias stability at the cost of reduced voltage headroom and slightly narrower bandwidth.
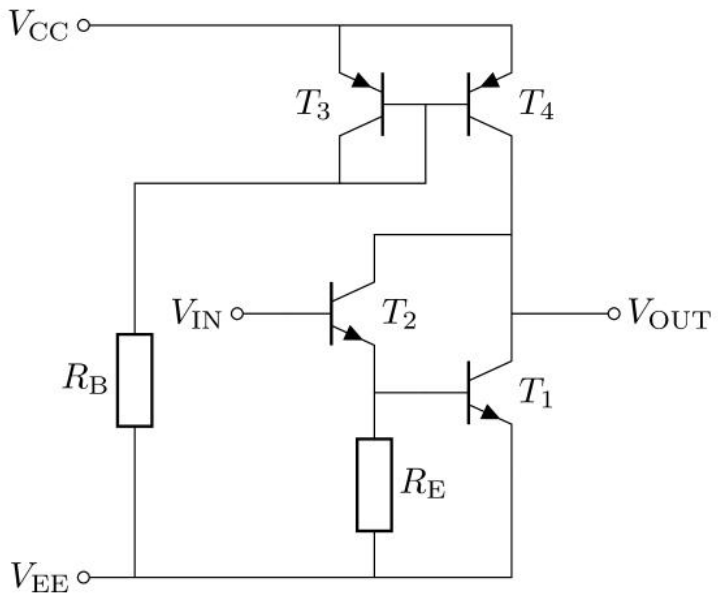
Circuit diagram of Darlington pair: